rutec Licht GmbH & Co. KG | Carl-Zeiss-Str. 15 | 28857 Syke

TEL +49 (0) 42 42 95 65 - 0 | FAX +49 (0) 42 42 95 65 - 25 | E-MAIL INFO@RUTEC.DE | WWW.RUTEC.DE

2700K 25° 350mA CRI90 m.Scheibe LED Einbaustr. 8W chrommatt.o.Konv.

Article nr.: ALU57359UWWOK

for indoor use, IP 20 · · housing: diecast aluminum, glass reflector, protective glass · housing color: chrome matt · 30° swivelling · beam angle: 25° · power: 8 W · light color: 2700 K · luminous flux: 670 lm · CRI: >90 · lifetime L70B50: >= 50.000 h · input: 350 mA DC · protection class III, MM · · installation depth: 40 mm · ceiling cut-out: 68 mm · outer diameter: 82 mm · energie efficiency class: F · not included LED converter

TECHNICAL DATA

Unit Code	pcs
BAR code	4012094073590
Housing colour	Chrom matt
Height	31.00 mm
Outer diameter	82 mm
Hole size	68 mm
Depth in ceiling	40.00 mm
LED colour	ca. 2700K ultra warmweiß
Lightoutput per fixture	670.00 lm
Lamp	Inklusive LED

rutec Licht GmbH & Co. KG | Carl-Zeiss-Str. 15 | 28857 Syke

TEL +49 (0) 42 42 95 65 - 0 | FAX +49 (0) 42 42 95 65 - 25 | E-MAIL INFO@RUTEC.DE | WWW.RUTEC.DE

2700K 25° 350mA CRI90 m.Scheibe LED Einbaustr. 8W chrommatt.o.Konv.

Article nr.: ALU57359UWWOK

TECHNICAL DATA

IP rating	20
Power	8 W
Current mA	350 mA
Lamp base	ohne
Amount of LED	1
Material	Aluminium
Temperature range	-20 - 40
Energy ffficiency class	EEK-Label_F
CRI	≥ 90
Lifetime L70B50	50.000 h

rutec Licht GmbH & Co. KG | Carl-Zeiss-Str. 15 | 28857 Syke

TEL +49 (0) 42 42 95 65 - 0 | FAX +49 (0) 42 42 95 65 - 25 | E-MAIL INFO@RUTEC.DE | WWW.RUTEC.DE

2700K 25° 350mA CRI90 m.Scheibe LED Einbaustr. 8W chrommatt.o.Konv.

Article nr.: ALU57359UWWOK
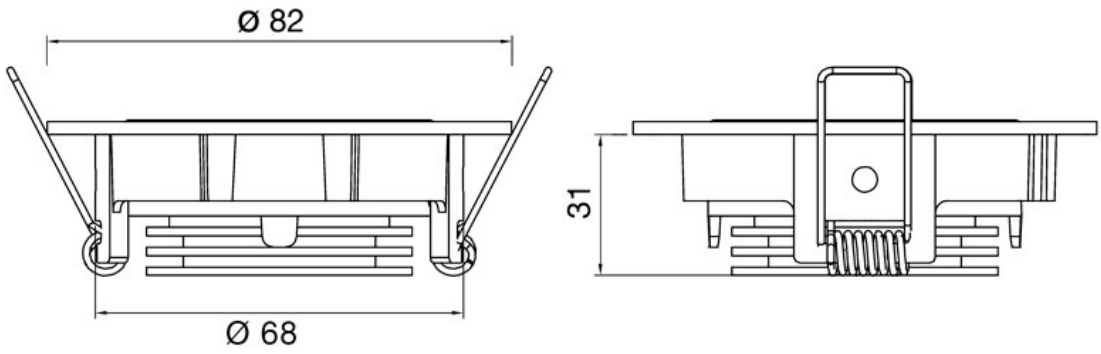
TECHNICAL DRAWING